30/32

Work Order ID 61581

Monday, August 30, 2010 12:44:44 PM

Item ID: D3946-1
Revision ID:
Item Name: Panel, Center Post
Start Date: 8/30/2010 **Start Qty:** 1.00- 3.00 ML
Required Date: 9/6/2010 **Req'd Qty:** 1.00
Reference:

Accept

Setup Start
Stop

Cust Item ID:
Customer:

Approvals: **Process Plan:** ML **Date:** 10-8-30 **Tooling:** _____ **Date:** _____
QC: _____ **Date:** _____ **SPC (Y/N):** _____ **Date:** _____

Run Start
Stop

Sequence ID/ Work Center ID	Operation Description	Set Up/ Run Hours	Tool ID	Tool #	Plan Code	Accept Qty	Reject Qty	Reject Number	Insp. Stamp
Draw Nbr	**Revision Nbr**								
D3946	A								
100	HAND FINISHING THERMOFORMING	0.00				(x3)			BB 10/10/05
HandThermo	**Memo**	0.00							
Hand Finishing Thermoforming	Cut Blanks to fit frame size								
105	Dry Material	0.00							
HandThermo	**Memo**	0.00							
Hand Finishing Thermoforming	Dry Sheet as per QS1022 POLYCARBONATE Temp: 240° Time IN: 4:30 10/10/05 Time OUT: 7:00 10/10/06								BB 10/10/06

Dart Aerospace Ltd

W/O:		WORK ORDER CHANGES					
DATE	STEP	PROCEDURE CHANGE	By	Date	Qty	Approval Chief Eng / Prod Mgr	Approval QC Inspector

Part No: _____ **PAR #:** _____ **Fault Category:** _____ **NCR:** Yes No **DQA:** _____ **Date:** _____

Resolution: _____ **Disposition:** _____ **QA: N/C Closed:** _____ **Date:** _____

NCR:		WORK ORDER NON-CONFORMANCE (NCR)						
DATE	STEP	Description of NC Section A	Corrective Action Section B			Verification Section C	Approval Chief Eng	Approval QC Inspector
			Initial Chief Eng	Action Description Chief Eng	Sign & Date			

NOTE: Date & initial all entries

H:\fFORMS\Quality Assurance\approved QA\NCRWO RevE

Work Order ID 61581

Monday, August 30, 2010 12:44:44 PM

Item ID: D3946-1 **Accept** **Setup Start**

Revision ID: **Stop**

Item Name: Panel, Center Post

Start Date: 8/30/2010 **Start Qty:** 1.00 **Cust Item ID:**

Required Date: 9/6/2010 **Req'd Qty:** 1.00 **Customer:**

Reference:

Run Start

Stop

Approvals: **Process Plan:** _____ **Date:** _____ **Tooling:** _____ **Date:** _____

QC: _____ **Date:** _____ **SPC (Y/N):** _____ **Date:** _____

Sequence ID/ Work Center ID	Operation Description	Set Up/ Run Hours	Tool ID	Tool #	Plan Code	Accept Qty	Reject Qty	Reject Number	Insp. Stamp
110		0.00							
Thermoform	THERMOFORMING MACHINE								
Thermoforming Machine	**Memo**	0.00							BB 10/10/06
	1-Machine Set-up								
	2-Pre-heat tool								BB 10/10/06
	3-Thermoform as per Dwg. D3646-1and Folio FTA 043 using tool DT9483□ Dwg. Rev. A Folio Rev. B					X3			BB 10/10/06
120	QC2- Inspect parts off machine FAI/FAIB	0.00				X3			BB 10/10/06
QC	**Memo**	0.00							
Quality Control	Visually inspect for proper formation of each part								
130	QC8- Inspect parts - second check	0.00				X3			
QC	**Memo**	0.00							10/10/06
Quality Control									

Dart Aerospace Ltd

W/O:		WORK ORDER CHANGES					
DATE	STEP	PROCEDURE CHANGE	By	Date	Qty	Approval Chief Eng / Prod Mgr	Approval QC Inspector

Part No: _____ **PAR #:** _____ **Fault Category:** _____ **NCR:** Yes No **DQA:** _____ **Date:** _____

Resolution: _____ **Disposition:** _____ **QA: N/C Closed:** _____ **Date:** _____

NCR:		WORK ORDER NON-CONFORMANCE (NCR)						
DATE	STEP	Description of NC Section A	Corrective Action Section B			Verification Section C	Approval Chief Eng	Approval QC Inspector
			Initial Chief Eng	Action Description Chief Eng	Sign & Date			

NOTE: Date & initial all entries

H:\fFORMS\Quality Assurance\approved QA\NCRWO RevE

Work Order ID 61581

Monday, August 30, 2010 12:44:44 PM

Item ID: D3946-1 **Accept** **Setup Start**

Revision ID: **Stop**

Item Name: Panel, Center Post

Start Date: 8/30/2010 **Start Qty:** 1.00 **Cust Item ID:**

Required Date: 9/6/2010 **Req'd Qty:** 1.00 **Customer:**

Reference:

Run Start

Approvals: **Process Plan:** _____ **Date:** _____ **Tooling:** _____ **Date:** _____

Stop

QC: _____ **Date:** _____ **SPC (Y/N):** _____ **Date:** _____

Sequence ID/ Work Center ID	Operation Description	Set Up/ Run Hours	Tool ID	Tool #	Plan Code	Accept Qty	Reject Qty	Reject Number	Insp. Stamp
140		0.00							
Thermoform	HAND FINISHING THERMOFORMING						x3		10/10/06
Thermoforming Machine	**Memo** Trim to Finished Dimensions as per dwg D3946-1	0.00							
150	QC2- Inspect parts off machine FAI/FAIB	0.00					x3		10/10/06
QC	**Memo** Check dimensions to ensure conformity to drawing tolerances.	0.00							
160	QC5- Inspect part completeness to step on W/O	0.00							
QC	**Memo**	0.00				x3			
Quality Control									

10/10/06

Dart Aerospace Ltd

W/O:		WORK ORDER CHANGES					
DATE	STEP	PROCEDURE CHANGE	By	Date	Qty	Approval Chief Eng / Prod Mgr	Approval QC Inspector

Part No: _____ **PAR #:** _____ **Fault Category:** _____ **NCR:** Yes No **DQA:** _____ **Date:** _____

Resolution: _____ **Disposition:** _____ **QA: N/C Closed:** _____ **Date:** _____

NCR:		WORK ORDER NON-CONFORMANCE (NCR)						
DATE	STEP	Description of NC Section A	Corrective Action Section B			Verification Section C	Approval Chief Eng	Approval QC Inspector
			Initial Chief Eng	Action Description Chief Eng	Sign & Date			

NOTE: Date & initial all entries

H:\fFORMS\Quality Assurance\approved QA\NCRWO RevE

Work Order ID 61581

Monday, August 30, 2010 12:44:44 PM

Item ID: D3946-1 **Accept** **Setup Start**

Revision ID: **Stop**

Item Name: Panel, Center Post

Start Date: 8/30/2010 **Start Qty:** 1.00 **Cust Item ID:**

Required Date: 9/6/2010 **Req'd Qty:** 1.00 **Customer:**

Reference:

Run Start

Stop

Approvals: **Process Plan:** _____ **Date:** _____ **Tooling:** _____ **Date:** _____

QC: _____ **Date:** _____ **SPC (Y/N):** _____ **Date:** _____

Sequence ID/ Work Center ID	Operation Description	Set Up/ Run Hours	Tool ID	Tool #	Plan Code	Accept Qty	Reject Qty	Reject Number	Insp. Stamp
170	Identify as per dwg & Stock Location: 150	0.00				10/10/6		32	
Packaging	**Memo**	0.00							
Packaging									
180	QC21- Final Inspection - Work Order Release	0.00					10/10/06		
QC	**Memo**	0.00							
Quality Control									

mr 10-10-6

Dart Aerospace Ltd

W/O:		WORK ORDER CHANGES					
DATE	STEP	PROCEDURE CHANGE	By	Date	Qty	Approval Chief Eng / Prod Mgr	Approval QC Inspector

Part No: _____ **PAR #:** _____ **Fault Category:** _____ **NCR:** Yes No **DQA:** _____ **Date:** _____

Resolution: _____ **Disposition:** _____ **QA: N/C Closed:** _____ **Date:** _____

NCR:		WORK ORDER NON-CONFORMANCE (NCR)						
DATE	STEP	Description of NC Section A	Corrective Action Section B			Verification Section C	Approval Chief Eng	Approval QC Inspector
			Initial Chief Eng	Action Description Chief Eng	Sign & Date			

NOTE: Date & initial all entries

H:\fFORMS\Quality Assurance\approved QA\NCRWO RevE

Picklist Print

Monday, August 30, 2010 12:44:49 PM

T

Work Order ID: 61581

Parent Item: D3946-1

Parent Item Name: Panel, Center Post

Start Date: 8/30/2010 **Required Date:** 9/6/2010

Start Qty: 1.00 **Required Qty:** 1.00

Comments: IPP RevA: New issue DD verified by:EC
Add Step 105 Dry Material 10/04/21 DL

IPP Rev B

Component Item ID/ Item Name	Replacement Item ID	Mfg/ Purch	Bin Item	Primary Location	Last Location	Route Seq ID	Unit of Measure	Qty on Hand	Qty per Kit	Total Qty	Qty Issued	Date Issued	Status
MLEXS.093-F6006-07 GE PLASTICS LEXAN SHEET		Purchased	No			100	sf	1,865.801	3.305	3.478947			

Location	Loc Qty	Loc Code
therm	1865.801	
107574	6.46	
111973	27.395	
112176	101.2267	
114459	1730.7193	

X3

10/10/05

Dart Aerospace Ltd

W/O:		WORK ORDER CHANGES					
DATE	STEP	PROCEDURE CHANGE	By	Date	Qty	Approval Chief Eng / Prod Mgr	Approval QC Inspector

Part No: _____ **PAR #:** _____ **Fault Category:** _____ **NCR:** Yes No **DQA:** _____ **Date:** _____

Resolution: _____ **Disposition:** _____ **QA: N/C Closed:** _____ **Date:** _____

NCR:		WORK ORDER NON-CONFORMANCE (NCR)						
DATE	STEP	Description of NC Section A	Corrective Action Section B			Verification Section C	Approval Chief Eng	Approval QC Inspector
			Initial Chief Eng	Action Description Chief Eng	Sign & Date			

NOTE: Date & initial all entries

H:\fFORMS\Quality Assurance\approved QA\NCRWO RevE

DART AEROSPACE LTD	Work Order:	61581
Description: Panel, Center Post	Part Number:	D3946-1
Inspection Dwg: D3946 Rev: A		Page 1 of 1

FIRST ARTICLE INSPECTION CHECKLIST

[X] First Article [ ] Prototype

THERMOFORMING SECTION

Description	Accept	Reject	Method of Inspection	Comments
Inside Radii less than _____"	✓			
Shape Definition	✓			
Texture Retention	✓			
Material imperfections such as bumps, cracks, voids, scratching	✓			

Measured by:	DL	Date:	10/10/06

TRIMMING SECTION

Drawing Dimension	Tolerance	Actual Dimension	Accept	Reject	Method of Inspection	Comments
39.25	REF	39.25"	✓			
1.25	REF	1.25"	✓			
3.2	REF	3.22"	✓			
0.070	Min	0.072"	✓			

Measured by:	DL	Date:	10/10/06
Audited by:	BB	Date:	10/10/06.
Prototype Approval:	N/A	Date:	N/A

Rev	Date	Change	Revised by	Approved
A	09.09.15	New Issue	KJ	

Dart Aerospace Ltd

W/O:		WORK ORDER CHANGES					
DATE	STEP	PROCEDURE CHANGE	By	Date	Qty	Approval Chief Eng / Prod Mgr	Approval QC Inspector

Part No: _____ **PAR #:** _____ **Fault Category:** _____ **NCR:** Yes No **DQA:** _____ **Date:** _____

Resolution: _____ **Disposition:** _____ **QA: N/C Closed:** _____ **Date:** _____

NCR:		WORK ORDER NON-CONFORMANCE (NCR)						
DATE	STEP	Description of NC Section A	Corrective Action Section B			Verification Section C	Approval Chief Eng	Approval QC Inspector
			Initial Chief Eng	Action Description Chief Eng	Sign & Date			

NOTE: Date & initial all entries

H:\fFORMS\Quality Assurance\approved QA\NCRWO RevE

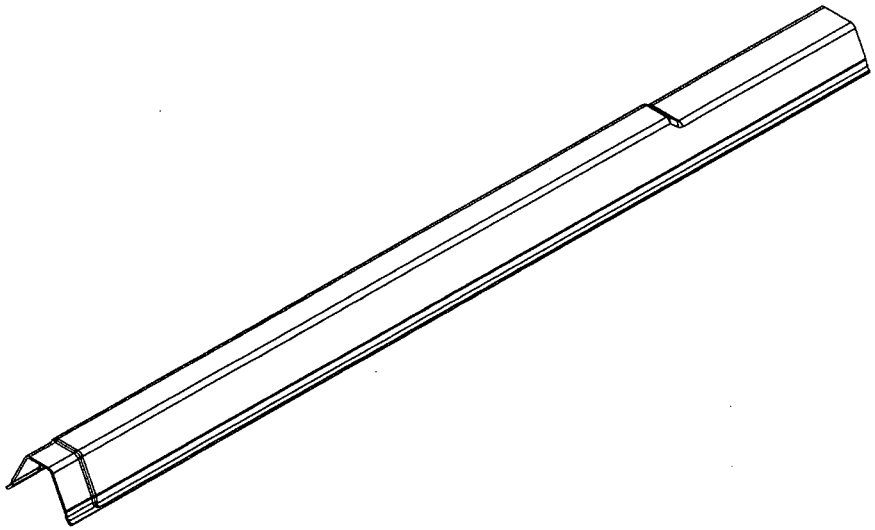

SHOP COPY
RETURN TO
ENGINEERING
UNCONTROLLED COPY
SUBJECT TO AMENDMENT
WITHOUT NOTICE
WORK ORDER
NO. 61581
BS 10-8-30

D3946-1 PANEL, CENTER POST

RELEASED
09/06/16

NOTES:
1) MATERIAL: F6006 SUEDE/POLISHED GY5B133 LIGHT GREY LEXAN SHEET 0.093 THICK
REF DART SPEC MLEXS.093-F6006-07
2) FINISH: NONE
3) TOLERANCES: PER DART QSI 018 UNLESS OTHERWISE NOTED
4) UNITS: INCHES UNLESS OTHERWISE NOTED
5) BREAK SHARP EDGES: 0.005 TO 0.010 MAX
6) IDENTIFICATION: IDENTIFY WITH DART P/N "D3946-1" AND B/N USING VIBRATING STYLUS
7) WEIGHT: 0.74 lbs
8) TOOLING: THERMOFORM PER MOLD DT9483 PER DART QSI 022. TRIM PER MOLD
9) MINIMUM THICKNESS: 0.070" UNLESS OTHERWISE NOTED

REV.	DESCRIPTION	BY	DATE
A	NEW ISSUE	PH	09.05.19

DESIGN		DART AEROSPACE LTD HAWKESBURY, ONTARIO, CANADA	
DRAWN	PH		
CHECKED		DRAWING NO. D3946	REV. A SHEET 1 OF 2
MFG. APPR.			
APPROVED		TITLE PANEL, CENTER POST	SCALE NTS
DE APPR.			
DATE	09.05.19		

Dart Aerospace Ltd

W/O:		WORK ORDER CHANGES					
DATE	STEP	PROCEDURE CHANGE	By	Date	Qty	Approval Chief Eng / Prod Mgr	Approval QC Inspector

Part No: _____ **PAR #:** _____ **Fault Category:** _____ **NCR:** Yes No **DQA:** _____ **Date:** _____

Resolution: _____ **Disposition:** _____ **QA: N/C Closed:** _____ **Date:** _____

NCR:		WORK ORDER NON-CONFORMANCE (NCR)						
DATE	STEP	Description of NC Section A	Corrective Action Section B			Verification Section C	Approval Chief Eng	Approval QC Inspector
			Initial Chief Eng	Action Description Chief Eng	Sign & Date			

NOTE: Date & initial all entries

H:\fFORMS\Quality Assurance\approved QA\NCRWO RevE

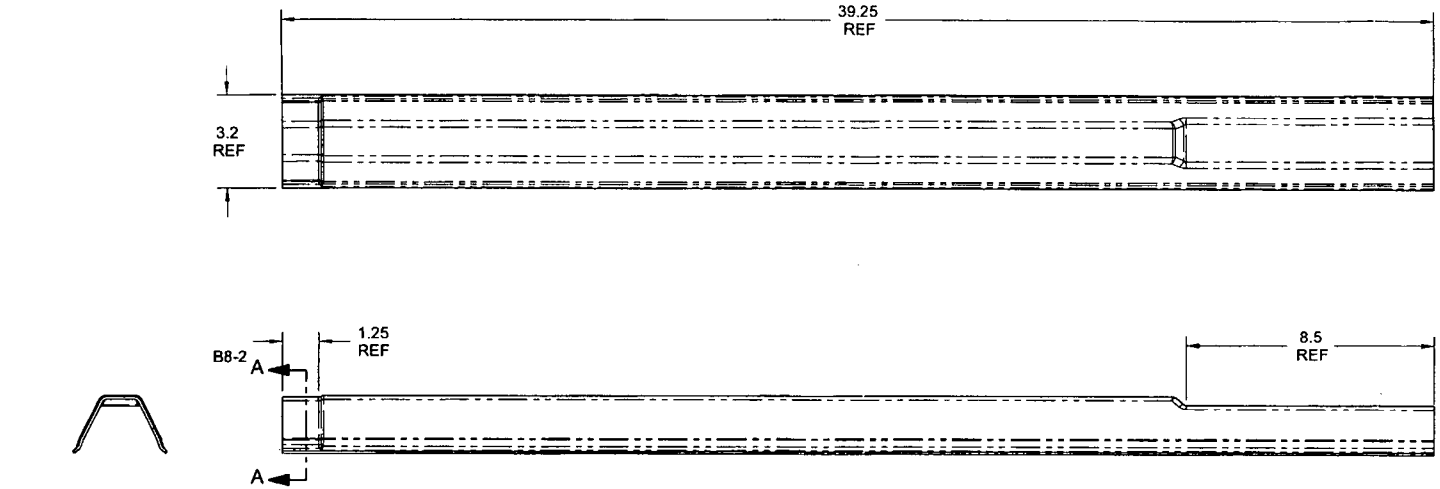

RELEASED

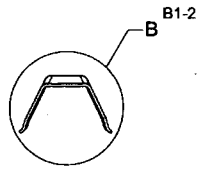

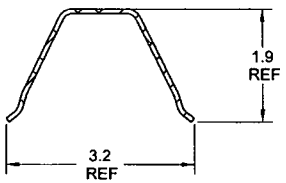

SECTION A-A C7-2
SCALE 2X

D3946-1 PANEL, CENTER POST

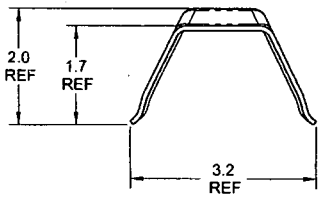

DETAIL B C1-2
SCALE 2X

w/o 41581

DESIGN		**DART AEROSPACE LTD** HAWKESBURY, ONTARIO, CANADA
DRAWN		
CHECKED		DRAWING NO. D3946 — REV. A — SHEET 2 OF 2
MFG. APPR.		
APPROVED		TITLE: PANEL, CENTER POST — SCALE: NTS
DE APPR.		
DATE	09.05.19	

Dart Aerospace Ltd

W/O:		WORK ORDER CHANGES					
DATE	STEP	PROCEDURE CHANGE	By	Date	Qty	Approval Chief Eng / Prod Mgr	Approval QC Inspector

Part No: _____ **PAR #:** _____ **Fault Category:** _____ **NCR:** Yes No **DQA:** _____ **Date:** _____

Resolution: _____ **Disposition:** _____ **QA: N/C Closed:** _____ **Date:** _____

NCR:		WORK ORDER NON-CONFORMANCE (NCR)						
DATE	STEP	Description of NC Section A	Corrective Action Section B			Verification Section C	Approval Chief Eng	Approval QC Inspector
			Initial Chief Eng	Action Description Chief Eng	Sign & Date			

NOTE: Date & initial all entries

H:\fFORMS\Quality Assurance\approved QA\NCRWO RevE